kamstrup

Data sheet

NB-IoT inputs (In-A, In-B)

MULTICAL® 403
MULTICAL® 603
MULTICAL® 803

- Mobile network module for automatic reading of MULTICAL® 403/603/803
- Uses the mobile infrastructure (NB-IoT) for data communication
- Plug-and-play solution – transmission to READy Manager every 15 minutes/hour/day
- Built-in datalogger
- Support for third-party system solutions
- For mains and battery supply – up to 16 years of battery lifetime
- Exact timestamp on datagrams
- Eight (8) years data communication included
- Possibility of extending the data communication with additional years
- Two extra pulse inputs for connection of water and/or electricity meters
- Dedicated external antenna for the mobile infrastructure

Contents

Generel description and applications

NB-IoT (Narrow Band Internet of Things) is an emerging communication technology offered by almost all main mobile operators (telcos) in the world. Unlike 2G, 3G and 4G, which are designed for high-speed communications at the expense of high power consumption, NB-IoT supports low data rate communications, but in return offers superior power efficiency and this feature makes battery operation possible.

Kamstrup's NB-IoT module is designed for the European market and offers up to 16 years of battery lifetime including a daily transmission of hourly data, but is also available as mains-supplied, offering transmissions every 15 minutes or every hour.

The NB-IoT module comes as a plug-and-play module and is ready to transmit data without any further configuration. For further information, see Installation.

Data communication prepaid for eight (8) years is included in the module package and the data communication can be extended with up to additional 8 years, if needed.

The module is designed for all Kamstrup's generation 3 heat/cooling meters (MULTICAL® 403, MULTICAL® 603 and MULTICAL® 803) and uses the NB-IoT mobile infrastructure to transmit data from the energy meter back to the head-end system (HES) and the meter data management (MDM) system on a fixed basis – every 15 minutes, hour or day.

Data transmitted from the meter to the MDM system is protected via end-to-end encryption. The data registers are encrypted using AES128 encryption, located in the energy meter and the transport layer is protected using a unique AES256 encryption key, located in the communication module itself. Besides being a part of a full READy solution, it is also possible to implement the NB-IoT module into a third-party reading solution with help of an implementation guide.

The NB-IoT module is delivered with extra pulse inputs for additional consumption meters and an antenna connector for mounting the external antenna needed to obtain connectivity to the mobile infrastructure.

To obtain the best coverage, a dedicated external antenna – covering the NB-IoT mobile infrastructure - is delivered with the module.

The full READy solution

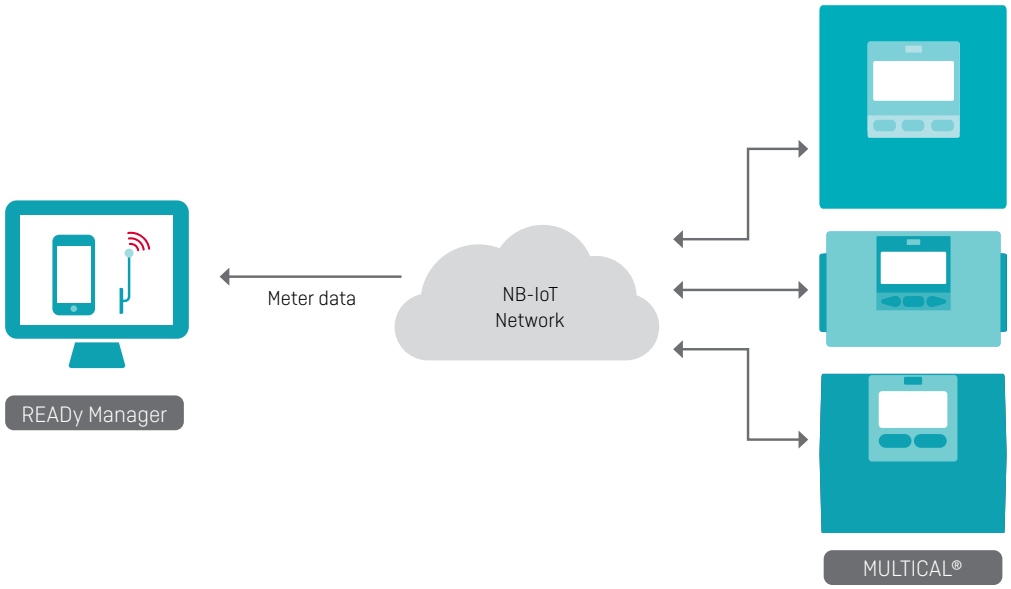

Support for third-party solution

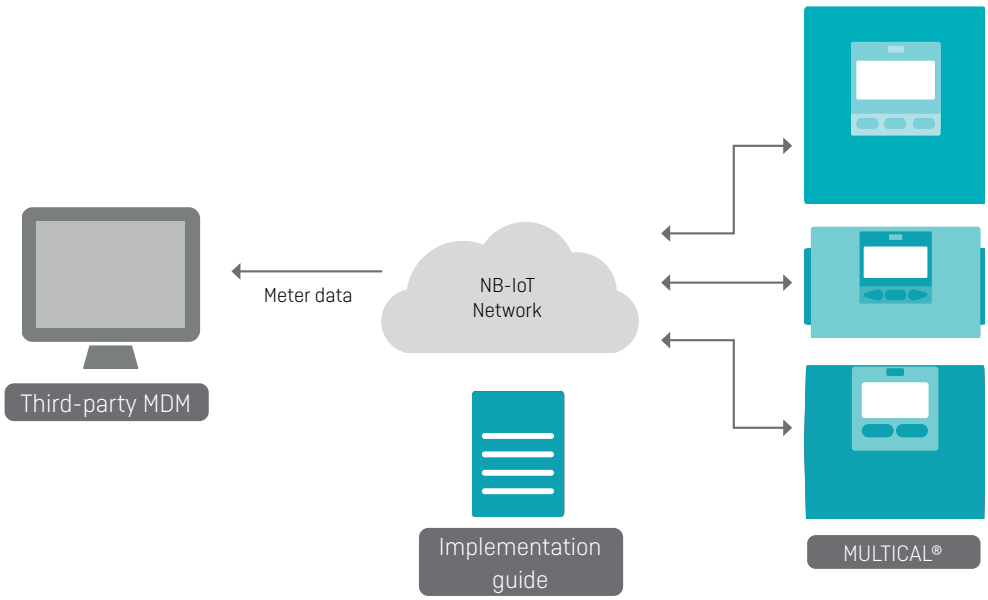

Cable connections

HC-003-56: NB-IoT, inputs (In-A, In-B)

Terminals

Max cable size 1.5 mm²

Pulse inputs

Terminal 65: Pulse In-A (+)

Terminal 66: Pulse In-A (-)

Terminal 67: Pulse In-B (+)

Terminal 68: Pulse In-B (-)

Antenna

The module is equipped with two pulse inputs, In-A and In-B, to collect and accumulate pulses, e.g. from water and electricity meters.

The pulse inputs are physically placed on the module. However, the accumulation and logging of values are performed by the MULTICAL® calculator.

When installing a module with pulse inputs in slot 2 of MULTICAL® 603 and MULTICAL® 803, the pulse inputs will be registered in the meter as In-A2 and In-B2.

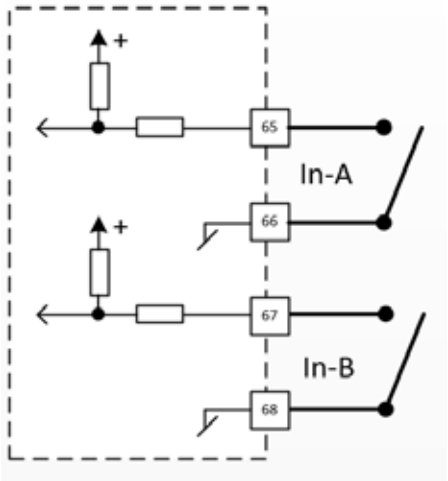

Antenna

This radio-based module must have an external antenna connected.

When mounting an external antenna, please ensure that the antenna cable is arranged in such a manner that damage of the cable is prevented when the meter is assembled.

Technical data

Physical

For installation in	MULTICAL® 403, MULTICAL® 603 and MULTICAL® 803

Mechanical data

Dimensions (L x W x D)	90 x 35 x 14 mm
Weight	< 45 g

MULTICAL® supply

	Battery IoT or High-Power supply – Battery IoT for MULTICAL® 403: C-cell (battery IoT only available for daily transmission) – Battery IoT for MULTICAL® 603: D-cell (battery IoT only available for daily transmission)
Radio	Frequency bands 20, 8 and 3 Maximum transmitting power: 23 dBm (200 mW)
Datalogger size	1,800 readings in total: – 1,800 days of readings every day – 30 days of readings every hour – 7 days of readings every 15 minutes

Pulse inputs

Input type	Contact input
Open voltage	3.6 V
Current	≤ 5 µA
Max cable length	10 m

Environment

Operational temperature	5 °C – 55 °C
Humidity	25 – 85 % RH non-condensing
Markings/approvals	CE, MID, RED together with the type approval of MULTICAL® 403/603/803

Programming

Configuration/firmware	Via the multipole connector on the module using METERTOOL HCW

Battery lifetime

Expected	Up to 16 years (daily transmission) depending on the installation site and the NB-IoT coverage level called "CE level"

CE level	MULTICAL® 403	MULTICAL® 603
0	Up to 12 years	Up to 16 years
1	Up to 11 years	Up to 15 years
2	Up to 6 years	Up to 12 years

Technical data

CE levels

Ordering

Description	Order No.
Module	HC-003-56
USB configuration cable for H/C-modules	6699 035
External antenna (mini triangle)	6699 448
Exit cable	5000 292
Extension cable 5 m	5000 429
Extension cable 10 m	5000 441
Extension cable 15 m	5000 442
Extension cable 20 m	5000 443
Extension cable 25 m	5000 444
External antenna for extension	6699 484
METERTOOL HCW	www.kamstrup.com

Installation

There are several ways to test if the module is connected to the NB-IoT mobile infrastructure and all the way to READy Manager.

1. Forced call

Press the front buttons until "CALL" is shown in the meter display.

This message will dissapear and the display will return to its normal state.

An "OK" will be shown shortly in the lower-left corner of the display within a few minutes, indicating that READy Manager is able to receive data from the meter.

2. Display information

To test if the module status is OK and if the module is connected to the mobile infrastructure, the meter display can be used.

The module information can be found in "TECH loop" on the display.

- Module in module slot 1: Choose menu 2-101 in "TECH loop".
- Module in module slot 2: Choose menu 2-202 in "TECH loop".

Menu	Menu index	Information	Display example
2-x01	31	Module type and configuration	
2-x01-1	32	Module firmware and revision	
2-x01-2	33	Module serial number	

2-x01-3: Connection information

Menu	Menu index	Information	Display example
2-x01-3	47	Link information with 2 digits of information	

The first digit shows the mobile connection:

- 9: Connected to the NB-IoT infrastructure

The second digit shows the quality of the connection if connection is possible:

- 0: Poor (CE level 2)
- 1: Weak (CE level 2)
- 2: Medium (CE level 1)
- 3: Good (CE level 1)
- 4: Excellent (CE level 0)

If the second digit is between 2 and 4, the installation is OK.

If the second digit is 1 or 0, an alternative location for the external antenna is needed.

Once the altenative location is found, make a forced call and wait 1 minute for the module to update the status and test if the connection quality has improved.

2-x01-4: Module status

Menu	Menu index	Information	Display example
2-x01-4	49	Module status	

Typical status codes during installation:

- 255: No connection to the NB-IoT network tried yet
- 0: Transmission OK – all data registers sent
- 1: Waiting for registration on the NB-IoT network
- 2: Registration to the NB-IoT network rejected
- 3: Waiting for reply from MDM
- 4: Registration to the NB-IoT network failed
- 5: Missing external antenna
- 6: Connection failed due to low voltage
- 7: Timeout - not all data stored in the module is delivered
- 8: Timeout - data not delivered
- 32: Error code from MDM - e.g. missing TEK (Transport Encryption Key)
- 33: First transmission from module is missing response from MDM

If any other status code is shown, please contact Kamstrup A/S.

Configuration

HC-003-56	XX	-	YY	-	ZZZ
Type					
NB-IoT module	56				
Transmission					
Transfer of 15-minute data every 15 minutes, 8 years of data communication, High-Power supply only			12		
Transfer of hourly data every hour, 8 years of data communication, High-Power supply only			14		
Transfer of hourly data every day, 8 years of data communication, Battery and High-Power supply			20		
Datagrams					
Battery datagram – standard registers					110
Battery datagram – alternative registers					111
High-Power datagram – standard registers					210
High-Power datagram – standard + Permanent Performance Monitoring (PPM) registers					211
High-Power datagram – Standard + pressure registers					212
...					...

For a complete overview of the contents of the different datagrams, please refer to document 55122746, datagram description for NB-IoT module HC-003-56.

Accessories

As external antenna, the mini triangle antenna, 6699 448, with 2.5 m antenna cable and MCX connector must be used.

If there is a need for more antenna cable, the solution below can extend the installation with up to 25 meters of cable.

Recommended solution

MULTICAL® 603

+

5000 292

+

5000 429: 5 m
5000 441: 10 m
5000 442: 15 m
5000 443: 20 m
5000 444: 25 m

+

6699 484

Kamstrup A/S • 58101820_C1_GB_02.2021

Kamstrup A/S
Industrivej 28, Stilling
DK-8660 Skanderborg
T: +45 89 93 10 00
F: +45 89 93 10 01
info@kamstrup.com
kamstrup.com